GENERAL RADIO COMPANY
engineering department

REPRINT No. A88 **1960**

Reprinted from NEREM 1960 RECORD November, 1960

A SIMPLIFIED NOISE THEORY AND ITS APPLICATION TO THE DESIGN OF LOW-NOISE AMPLIFIERS

by

A. E. Sanderson and R. C. Fulks

SESSION 19: Circuits II

19.2: A Simplified Noise Theory and Its Application to the Design of Low-Noise Amplifiers

A. E. SANDERSON AND R. G. FULKS

General Radio Company

West Concord, Mass.

THE DESIGN of low-noise amplifiers can be made much simpler than has been previously realized by the use of equivalent short-circuit and open-circuit noise generators as the measure of the *noisiness* of an amplifier, rather than the noise figure as such. This approach has two advantages, the magnitudes of the two equivalent noise inputs can be measured easily, and rigorous formulas for noise figure and optimum source resistance are most concisely expressed in terms of the two noise-generator parameters.

Basic noise theory states that a noisy amplifier can be represented by an equivalent noiseless amplifier plus a constant-current noise generator in parallel with, and a constant-voltage noise generator in series with, the input; Figure 1. The magnitudes of these two generators can be determined independently as follows: With the input terminals shorted, e_n is responsible for the entire noise output of the amplifier. To determine the value of e_n, the short-circuit noise output is compared with the output produced by a small known input voltage large enough to mask the noise. To determine i_n, the noise output of the amplifier with the input terminals open-circuited is compared with that produced by a small known current at the input.

The equations in Figure 2 show that the minimum noise figure of the amplifier depends primarily upon the *product* of e_n and i_n, while the optimum source resistance depends upon the *quotient* of e_n and i_n. This is an important simplification, since the effects of circuit changes, feedback, operating conditions, and other variables upon e_n *and* i_n are easily assessed, while their effects upon F_o and R_o can be obscure.

For example, the bias resistors of a transistor amplifier are in parallel with the input, and can obviously have no effect upon e_n. However, they will increase the value of i_n, and this will raise F_o and lower R_o. Resistors in parallel with the input must be large with respect to R_o (not necessarily with respect to the input impedance), so that their effect on F_o will be negligible. Resistors in series with the input must be small with respect to R_o for the same reason.

To specify the noise performance of the amplifier exactly, values are needed for γ (the correlation coefficient between the e_n and i_n generators) and for X_o, the reactive part of the optimum source impedance. To determine X_o, a curve of e_n versus source reactance may be plotted; X_o then equals the source reactance that gives minimum e_n. To determine γ, noise figure need be measured only once, at the optimum source impedance; then γ is the only remaining unknown in the equation for F_o. However, X_o is usually negligible at low frequencies, and γ is bounded ($0 \leq \gamma \leq 1$) and usually lies near 1, so that the upper limit on F_o (calculated assuming $X_o = 0$ and $\gamma = 1$) is quite accurate, and may actually exceed the accuracy with which the noise figure may be measured at very low values of F_o.

Both e_n and i_n are independent of feedback, and may be taken outside of the feedback loop with no change in value. The proof is as follows: Current feedback to the input obviously will not affect e_n because it will not change the voltage gain of the amplifier or the noise output with the input short-circuited. Since the i_n generator is outside of a current feedback loop, it remains unchanged. An analogous proof shows that e_n and i_n are independent of voltage feedback as well. Since the noise generators are independent of feedback, so also are F_o and R_o. Also, the noise generators are approximately the same for a given device in any of the three amplifier configurations. The generators appear to be a property of the device and independent of the way it is used.

At the optimum source resistance, both noise generators contribute equally to the noise output of the amplifier. At other source resistances, the noise figure is given by

$$F = 1 + \frac{1}{4kT\Delta f}\left(i_n^2 R_s + \frac{e_n^2}{R_s} + 2\gamma\, e_n i_n\right)$$

For source resistance much larger or much smaller than the optimum, the noise figure depends upon only one of the generators, and changes linearly with source resistance. For such source resistances, as well as for all reactive sources, it is more meaningful to rate an amplifier in terms of its noise generators (in $\mu v/cycle^{1/2}$ and $\mu\mu a/c^{1/2}$), since these numbers are independent of source resistance and source temperature. The signal-to-noise ratio is the ratio of the signal to the appropriate noise generator when the source impedance is much larger or smaller than e_n/i_n.

Both the e_n and the i_n generators vary widely between vacuum tubes and transistors, among the different types in each category, and somewhat with the operating conditions of a particular device. Since nothing can be done in the circuit to affect the generators, it is important to choose the device whose noise performance is best in the region of the intended sources impedance, and then to choose the optimum operating conditions for that source impedance. A convenient way of presenting information about the noise generators is the *noise diagram* shown in Figures 3 to 6. Both e_n and i_n are plotted on a logarithmic scale against some independent parameter, such as emitter current or collector voltage. Because of the log scale, minimum F_o is indicated by the minimum *sum* of the e_n and i_n *curves*, while R_o is proportional to the *difference* between the two curves. A survey of different devices can be made quickly since a minimum of information is required on each device tested.

Manufacturers could perform a service by publishing noise diagrams of their devices for several independent variables such as current, voltage, temperature and frequency, and thus facilitate the choice of the proper amplifying device for each application. The present method of rating by noise figure is at best cumbersome, and can be incomplete when the source resistance at which the noise figure is measured is not both specified and equal to R_o. The general use of noise generators could considerably simplify the representation and application of amplifying devices where noise performance is an important factor.

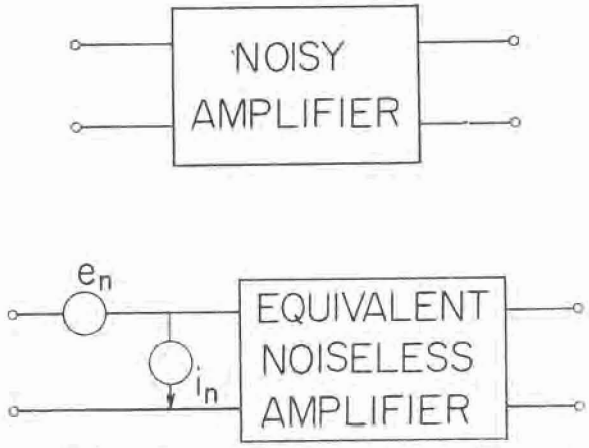

Figure 1—A noisy amplifier can be represented by an equivalent noiseless amplifier plus a constant-voltage noise generator in series with the input and a constant-current generator in parallel with the input.

$$|Z_o| = \frac{e_n}{i_n}$$

$$F_o = 1 + (1+\gamma)\frac{e_n\, i_n}{2kT\Delta f}\cdot\frac{R_o}{|Z_o|}$$

USUALLY $X_o = 0$ AND THEN $|Z_o| = R_o$;

$$R_o = \frac{e_n}{i_n}$$

$$F_o = 1 + (1+\gamma)\frac{e_n\, i_n}{2kT\Delta f}$$

Figure 2—Minimum noise figure F_o and optimum source impedance $Z_o = R_o + jX_o$ can be written concisely in terms of the equivalent noise generators. The correlation coefficient between the two generators, γ, lies between *0* and 1.

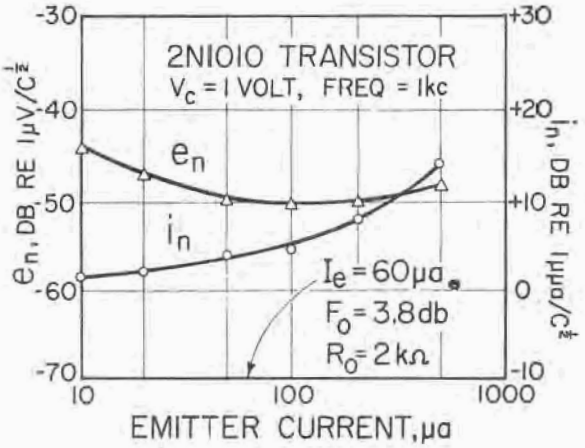

Figure 3—Noise diagram of a typical low-noise transistor, showing e_n and i_n as functions of emitter current. Minimum F_o occurs at the emitter current which minimizes the product of e_n and i_n.

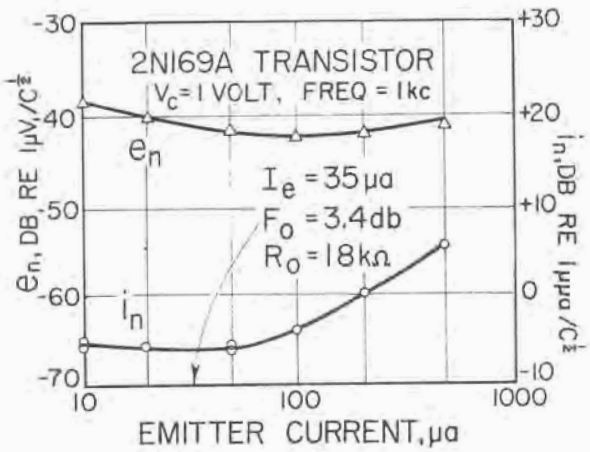

Figure 4—Noise diagram of a transistor for which F_o minimizes at a high source resistance. Conventional check of noise figure at 1000-ohm source resistance would not reveal this transistor's low-noise potential.

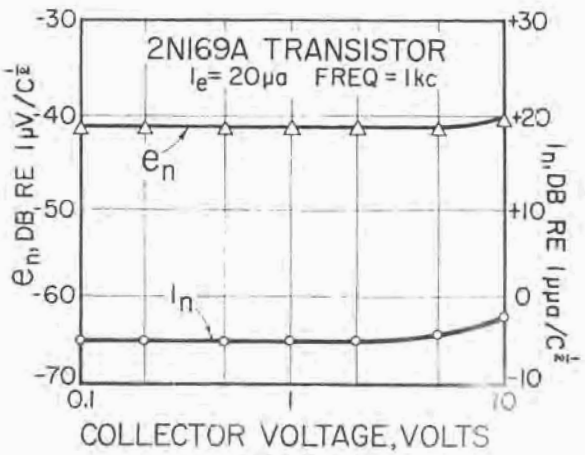

Figure 5—Noise diagram of a transistor with collector voltage as the independent parameter. Both e_n and i_n seem to be relatively independent of collector voltage up to several volts.

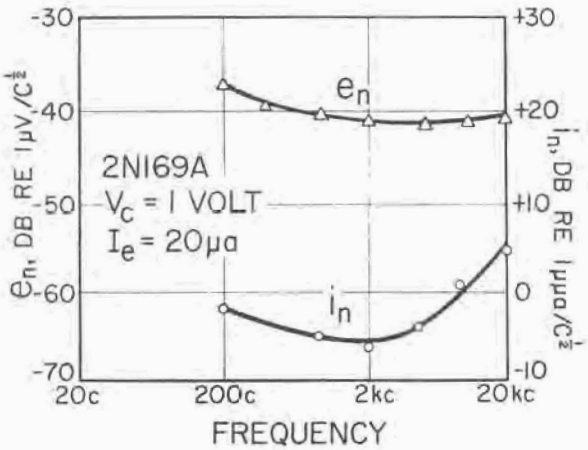

Figure 6—Noise diagram showing frequency spectrum of the e_n and i_n generators. The two generators do not necessarily have the same frequency spectrum.

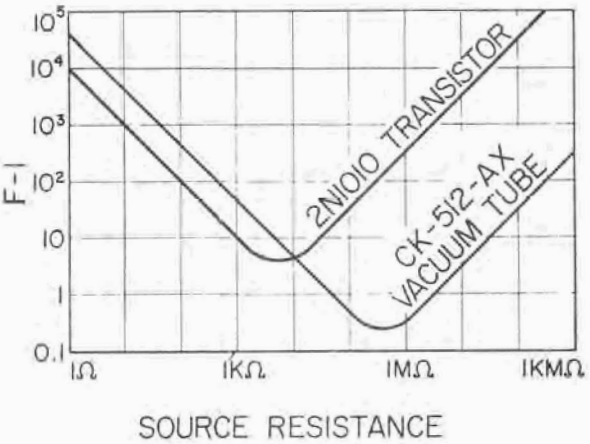

Figure 7—Comparison of a low-noise transistor with a low-noise vacuum tube. The transistor has a lower noise figure for source resistances below 10,000 ohms, while the vacuum tube is superior for source resistances above 10,000 ohms.

G E N E R A L R A D I O C O M P A N Y

WEST CONCORD, MASSACHUSETTS, USA

New York Chicago Philadelphia Washington

Los Angeles San Francisco Canada

Representatives in Principal Countries

Printed in U.S.A.